VALVE END VIEW

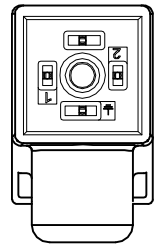

1 = BROWN
2 = BLUE
GND = BLACK

MALE END VIEW

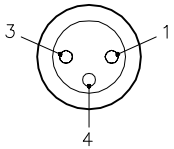

1 = N/C
3 = BLUE
4 = BROWN

WIRING DIAGRAM

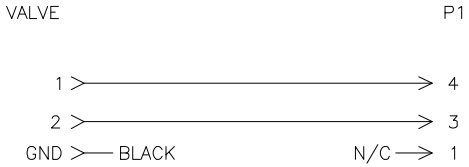

SPECIFICATIONS

CONTACT CARRIER MATERIAL	NYLON OR TPU
MOLDED HEAD MATERIAL/COLOR	TPU/TRANSLUCENT BLACK (VALVE), YELLOW (P1)
CONTACT MATERIAL/PLATINGM (VALVE)	BRASS/SILVER
CONTACT MATERIAL/PLATING (P1)	BRASS/GOLD
COUPLING NUT MATERIAL/PLATING (P1)	BRASS/NICKEL
RATED CURRENT [A]	4.0 A
RATED VOLTAGE [V]	125 V
OUTER JACKET MATERIAL/COLOR	PVC/YELLOW
CONDUCTOR INSULATION MATERIAL	PVC
NUMER OF CONDUCTORS [AWG]	3x24 AWG
OPERATING TEMPERATURE	−40°C to +105°C (−40°F to +221°F)
PROTECTION CLASS	MEETS NEMA 1,3,4,6P AND IEC IP67

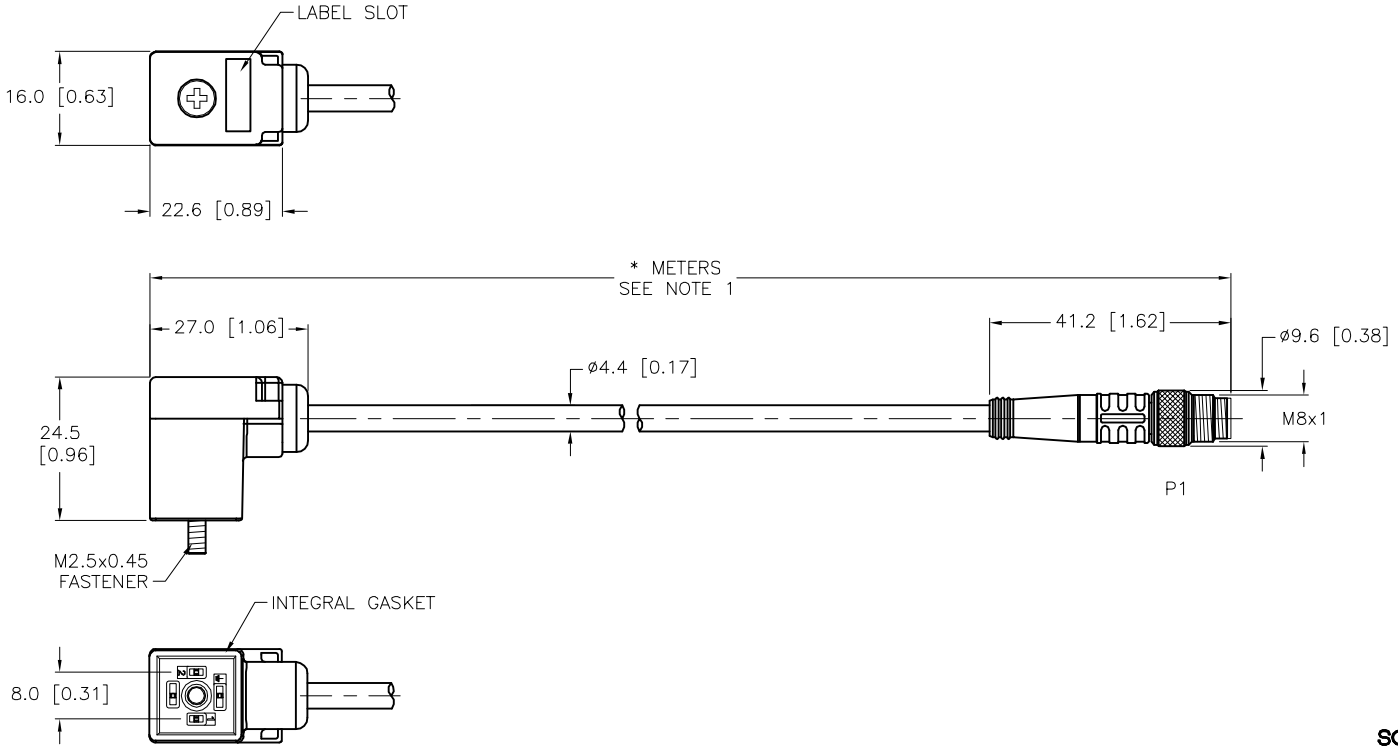

CABLE LENGTH	TOLERANCE*
ALL LENGTHS	+ 4% (OR 50mm) OF LENGTH − 0% (OR 0mm) OF LENGTH WHICHEVER IS GREATER
STRIP LENGTH	**TOLERANCE***
0−7mm	±0.5mm
8−29mm	±1.0mm
30−49mm	±2.0mm
50−69mm	±3.0mm
70−100mm	±4.0mm
OVER 100mm	±5.0mm
*** UNLESS OTHERWISE SPECIFIED**	

SOURCE DRAWING - FOR REFERENCE ONLY

NOTES:

1."*" INDICATES CABLE LENGTH IN METERS. CONTACT TURCK TO ORDER SPECIFIC LENGTHS.

REV	DESCRIPTION	BY	DATE	ECO NO.
G	UPDATED SCREW SIZE	AS	10/09/25	81429

RELATED DOCUMENTS
1.
2.
3.
4.

3RD ANGLE PROJECTION

THIS DRAWING IS CONFIDENTIAL AND THE PROPERTY OF TURCK INC. USE OF THIS DOCUMENT WITHOUT WRITTEN PERMISSION IS PROHIBITED.

TURCK
3000 CAMPUS DRIVE
MINNEAPOLIS, MN 55441
1−800−544−7769
(763) 553−7300
(763) 553−0708 fax
www.turck.us

MATERIAL: SEE SPECIFICATIONS

FINISH: SEE SPECIFICATIONS

ALL DIMENSIONS DISPLAYED ON THIS DRAWING ARE FOR REFERENCE ONLY

CONTACT TURCK FOR MORE INFORMATION

DRFT: RDS
DATE: 04/17/08
APVD:
SCALE: 1=1.3

UNIT OF MEASUREMENT
MILLIMETER [INCH]

DO NOT SCALE THIS DRAWING

DESCRIPTION: TC8S 2−A642−*M−PSG 3M

IDENTIFICATION NO.:

REV: G

FILE: 777021507

SHEET 1 OF 1